WEBB ROAD
STUDY AREA
WILD CHICKEN
SIMPLY PORTRAITS
JIM BOY'S TACOS
SUBWAY
STAR LIQUOR
CHRISTENSENS SADDLE SUPPLY
WELLS FARGO
US BANK
VINTAGE CHARM
FISHER BOOK
EARTH CENTRAL
HIGH HAND NURSERY/MARKET
TAYLOR ROAD
WALNUT STREET
HORSESHOE BAR ROAD
HORSESHOE BAR & GRILL
PIZZA FACTORY
MAIN DRUG STORE
POST OFFICE
NEW TOWN HALL
FIRE DEPT.
OAK STREET

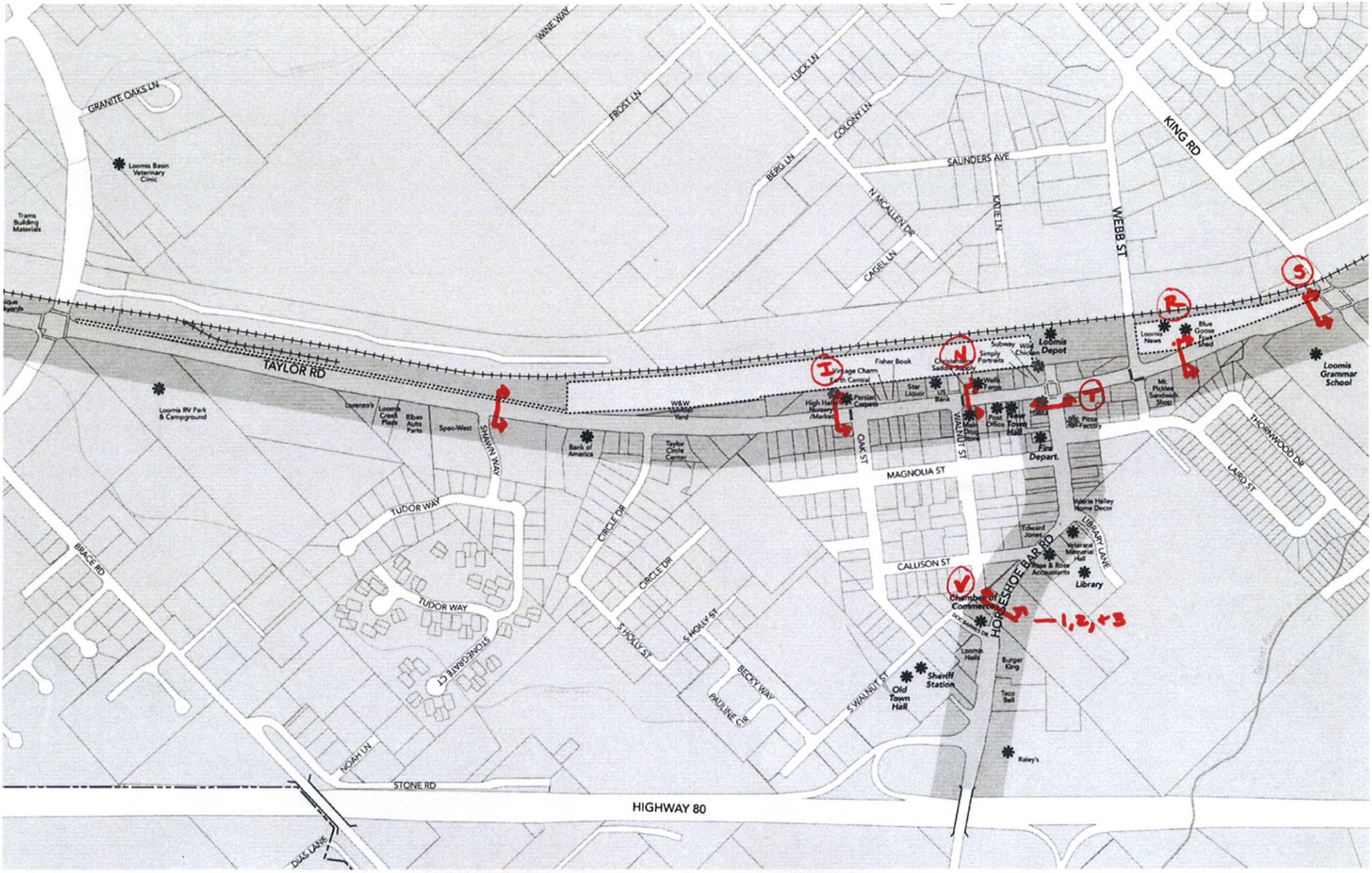

PROPOSED SECTION LOCATIONS

"A" Sections = Striped Bike Lanes

"B" Sections = Commuter Bike Lanes

Amenities

n Center Implementation Program

LOOMIS - TOWN CENTER
IMPLEMENTATION PROGRAM PHASE 1

EXHIBIT 6
SECTION I - TAYLOR ROAD

KEY MAP

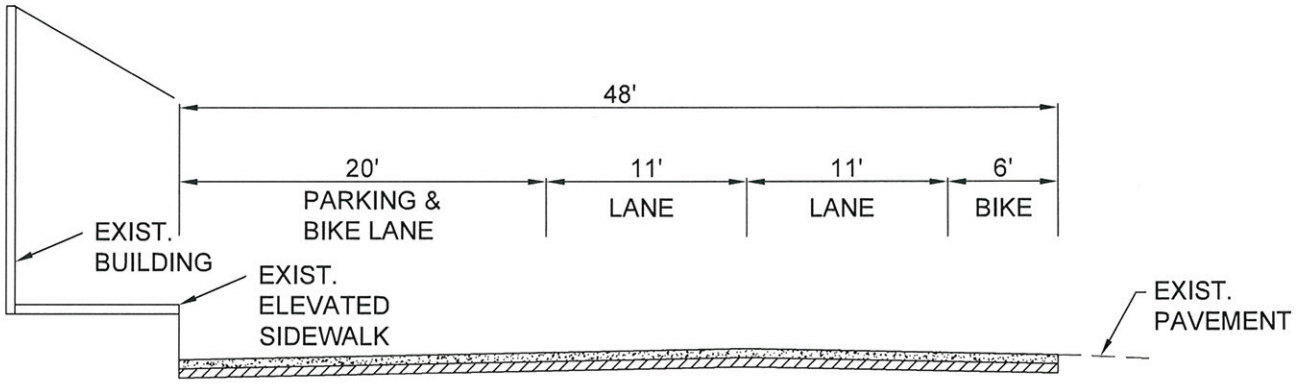

SCALE: 1"= 10'

1

2

3

10 0 5 10

TLA

File: K:\1proj\14XX\1448\Dwg\Exhibits\EXH-6I_XSEC.dwg Jun 25, 2009 - 11:18am jhenderson

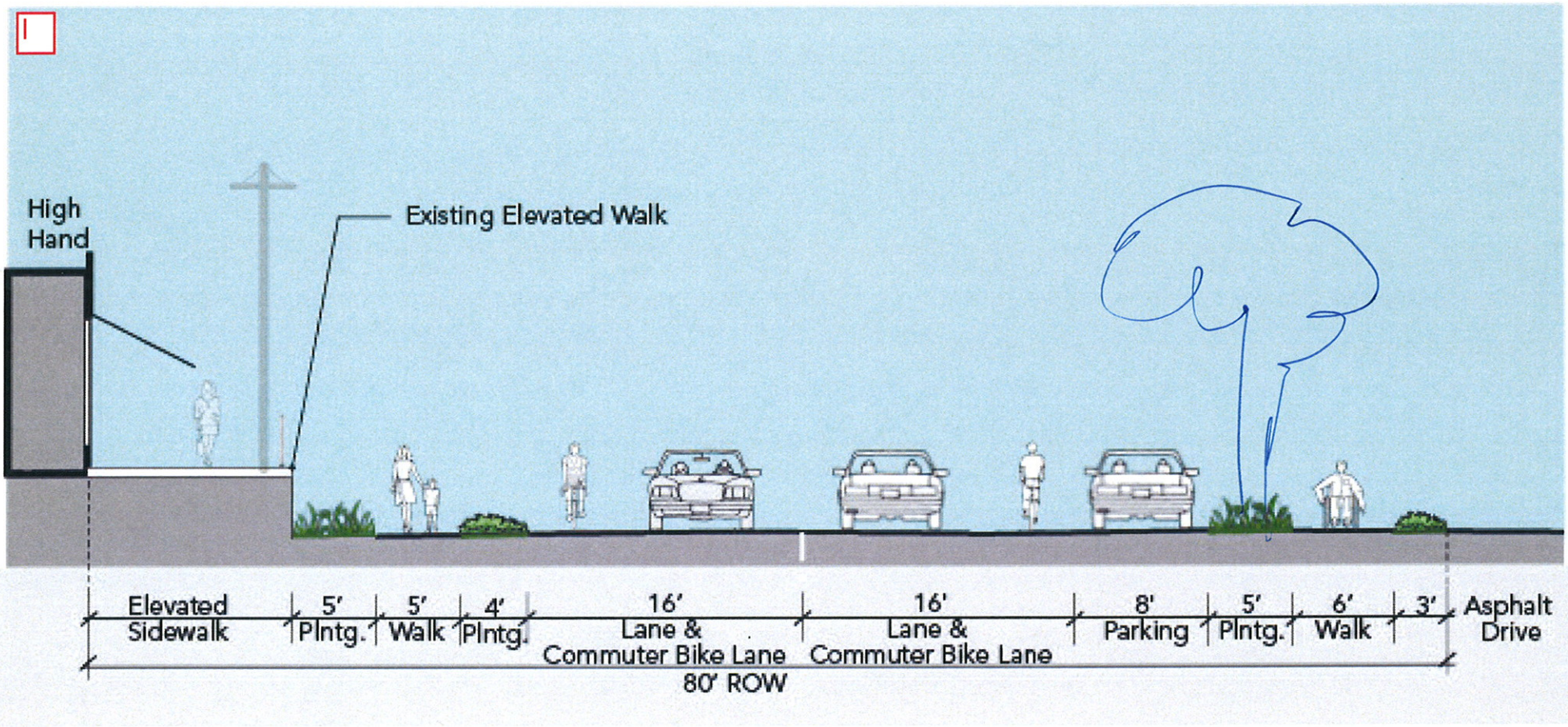
High Hand
Existing Elevated Walk
Elevated Sidewalk
5' Plntg.
5' Walk
4' Plntg.
16' Lane & Commuter Bike Lane
16' Lane & Commuter Bike Lane
8' Parking
5' Plntg.
6' Walk
3'
Asphalt Drive
80' ROW

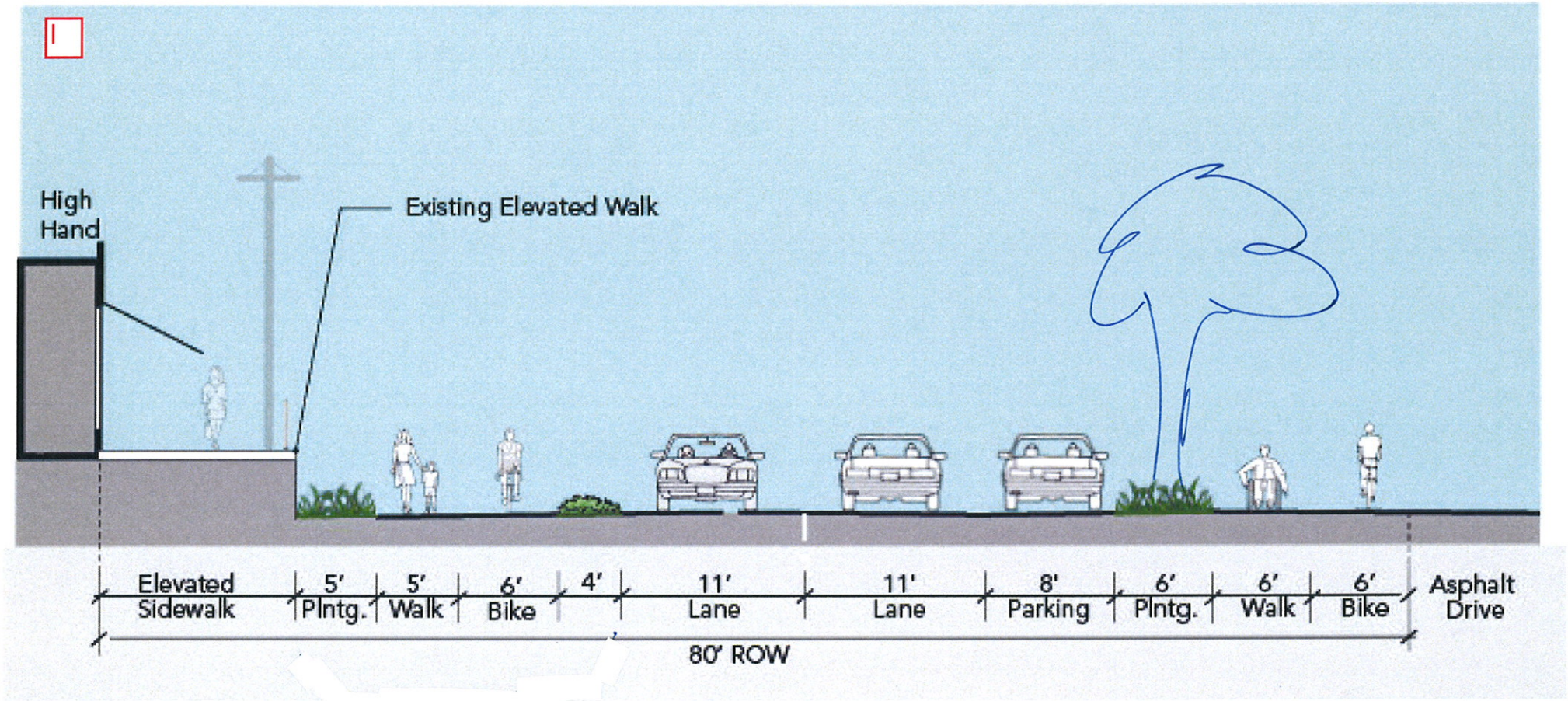
High Hand
Existing Elevated Walk
Elevated Sidewalk
5' Plntg.
5' Walk
6' Bike
4'
11' Lane
11' Lane
8' Parking
6' Plntg.
6' Walk
6' Bike
Asphalt Drive
80' ROW

LOOMIS - TOWN CENTER
IMPLEMENTATION PROGRAM PHASE 1

EXHIBIT 6
SECTION N - TAYLOR ROAD

KEY MAP

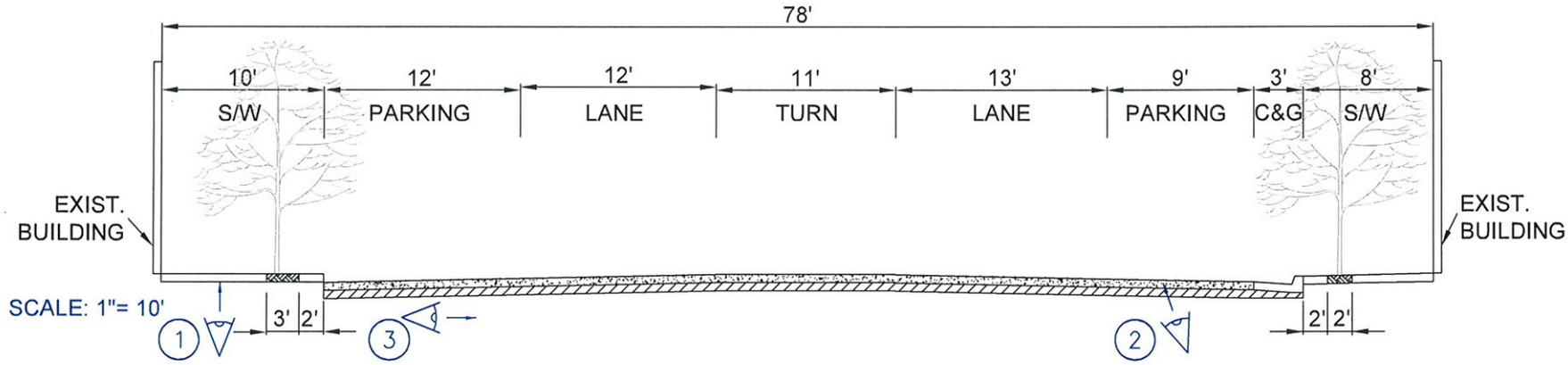

1

2

3

10 0 5 10

TLA

File: K:\1proj\14XX\1448\Dwg\Exhibits\EXH-6N_XSEC.dwg Jun 25, 2009 - 11:36am jhenderson

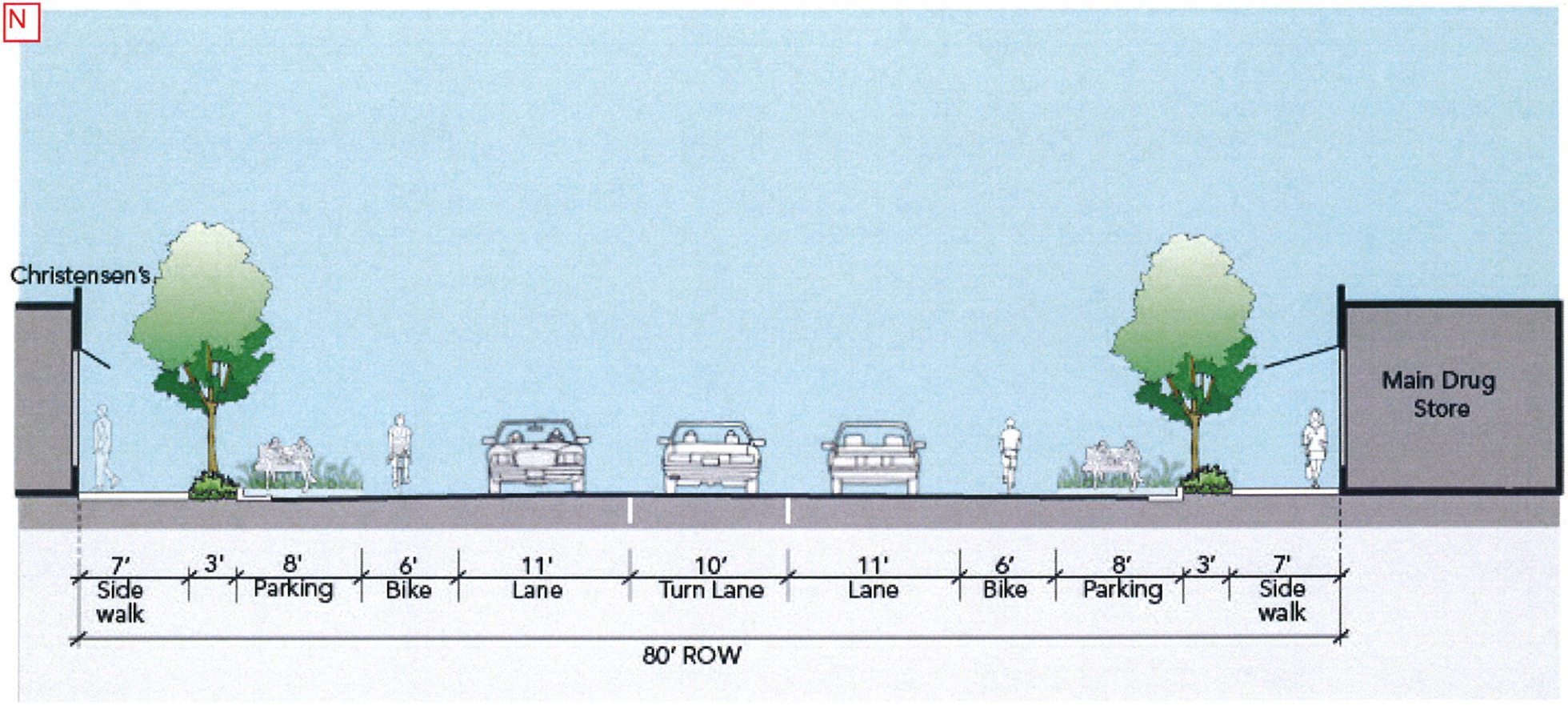
N
Christensen's
Main Drug Store
7' Side walk
3'
8' Parking
6' Bike
11' Lane
10' Turn Lane
11' Lane
6' Bike
8' Parking
3'
7' Side walk
80' ROW

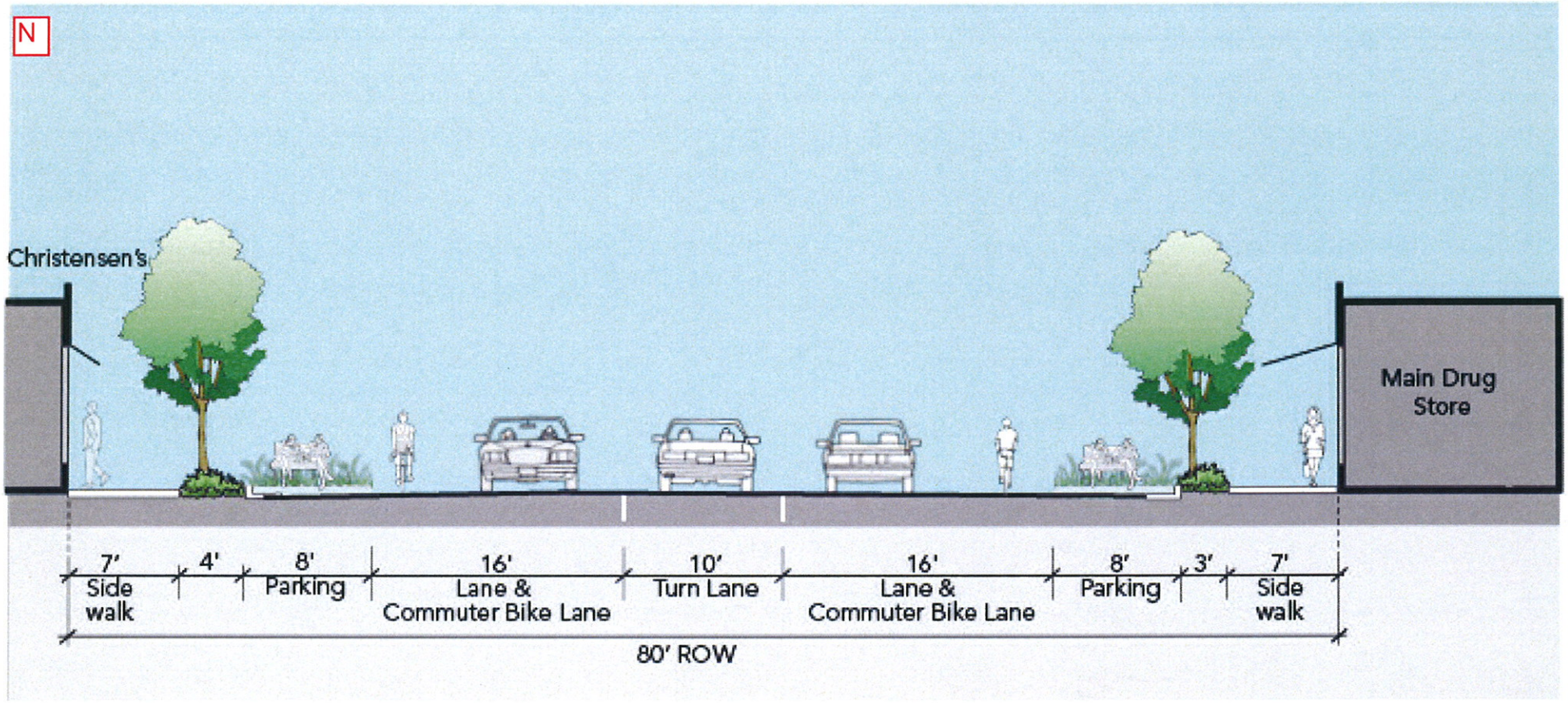
N
Christensen's
Main Drug Store
7' Side walk
4'
8' Parking
16' Lane & Commuter Bike Lane
10' Turn Lane
16' Lane & Commuter Bike Lane
8' Parking
3'
7' Side walk
80' ROW

KEY MAP

LOOMIS - TOWN CENTER
IMPLEMENTATION PROGRAM PHASE 1

EXHIBIT 6
SECTION R - TAYLOR ROAD

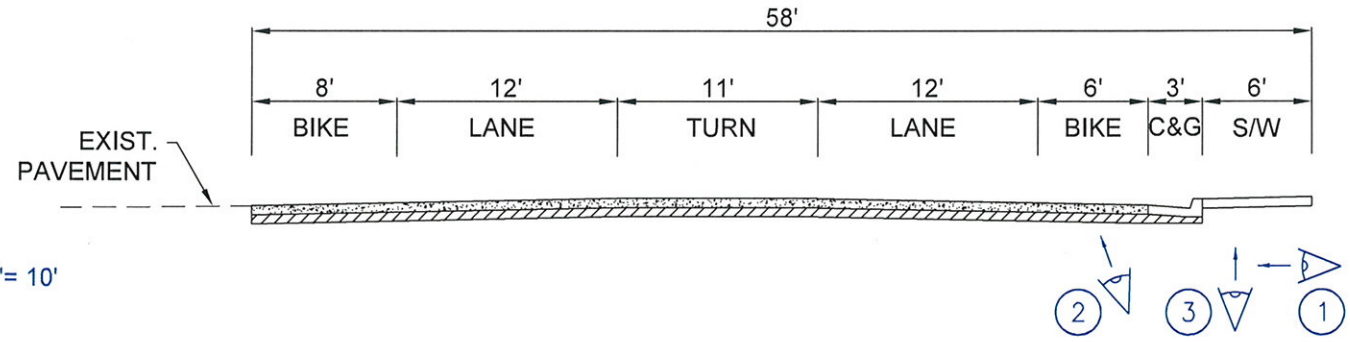

SCALE: 1"= 10'

1

2

3

10 0 5 10

TLA

File: K:\1proj\14XX\1448\Dwg\Exhibits\EXH-6R_XSEC.dwg Jun 25, 2009 - 12:06pm jhenderson

R

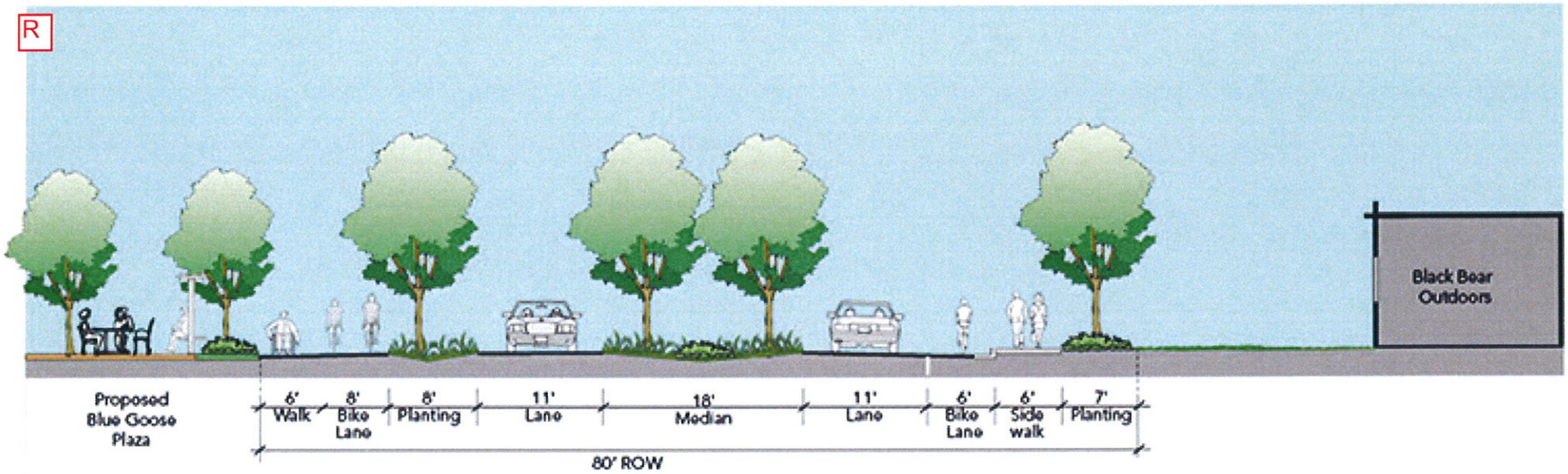
Black Bear Outdoors
Proposed Blue Goose Plaza
6' Walk
8' Bike Lane
8' Planting
11' Lane
18' Median
11' Lane
6' Bike Lane
6' Side walk
7' Planting
80' ROW

R

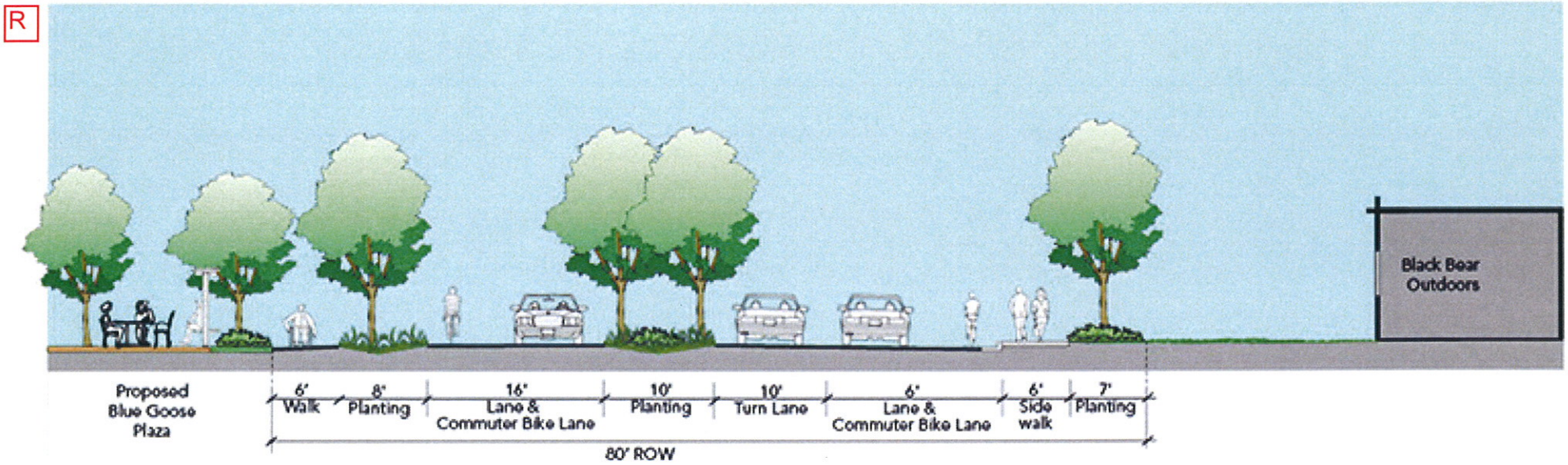
Black Bear Outdoors
Proposed Blue Goose Plaza
6' Walk
8' Planting
16' Lane & Commuter Bike Lane
10' Planting
10' Turn Lane
6' Lane & Commuter Bike Lane
6' Side walk
7' Planting
80' ROW

KEY MAP

LOOMIS - TOWN CENTER
IMPLEMENTATION PROGRAM PHASE 1

EXHIBIT 6
SECTION S - TAYLOR ROAD

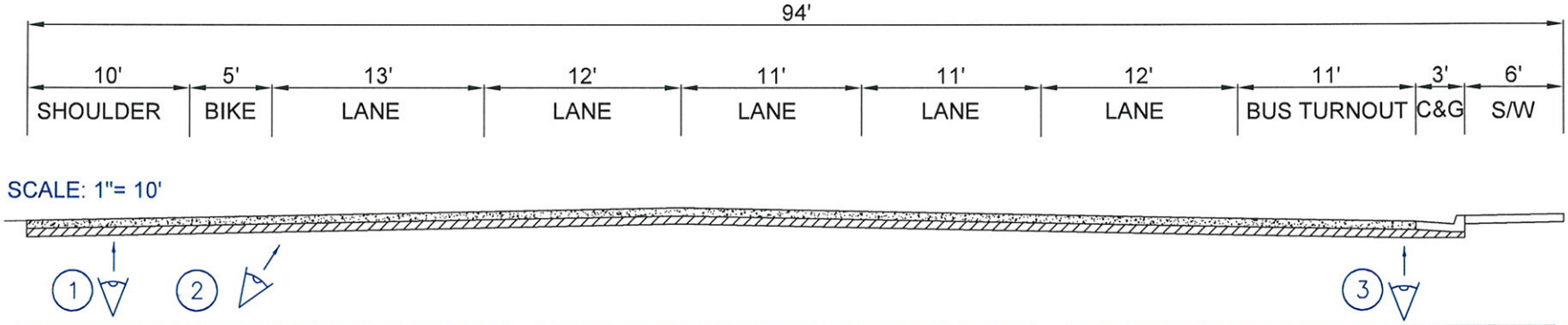

SCALE: 1"= 10'

1

2

3

10 0 5 10

TLA

File: K:\1proj\14XX\1448\Dwg\Exhibits\EXH-6S_XSEC.dwg Jun 25, 2009 - 12:08pm jhenderson

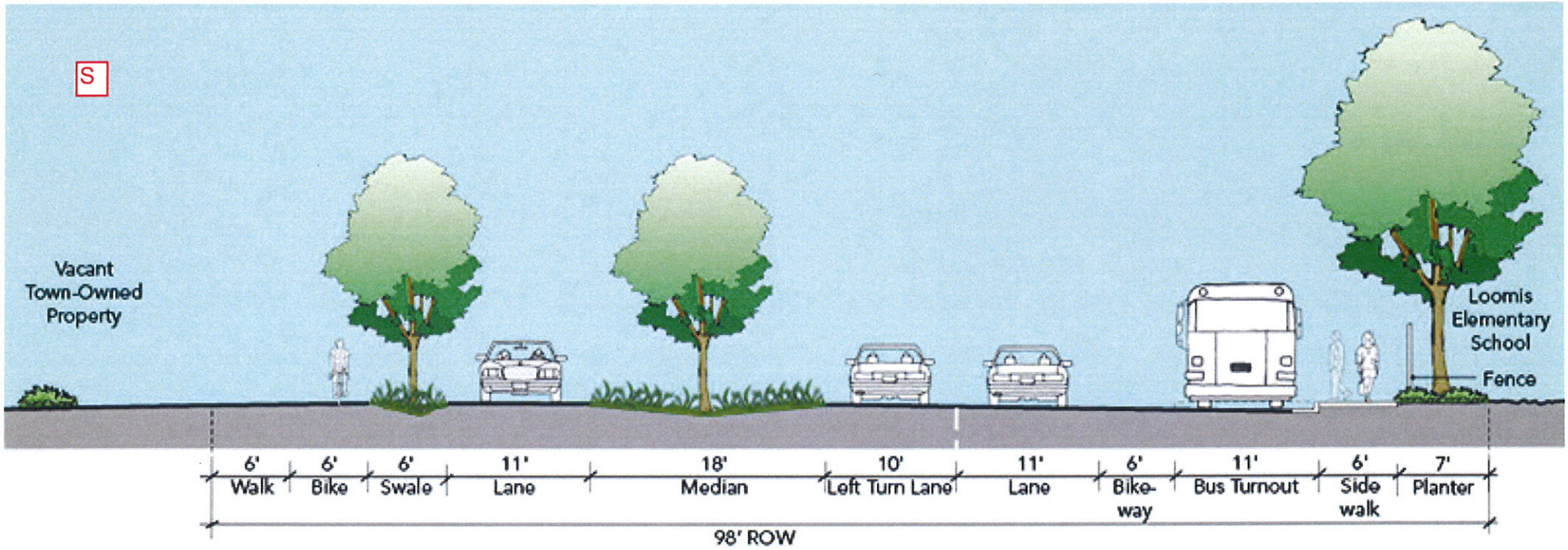
S
Vacant Town-Owned Property
Loomis Elementary School
Fence
6' Walk
6' Bike
6' Swale
11' Lane
18' Median
10' Left Turn Lane
11' Lane
6' Bike-way
11' Bus Turnout
6' Side walk
7' Planter
98' ROW

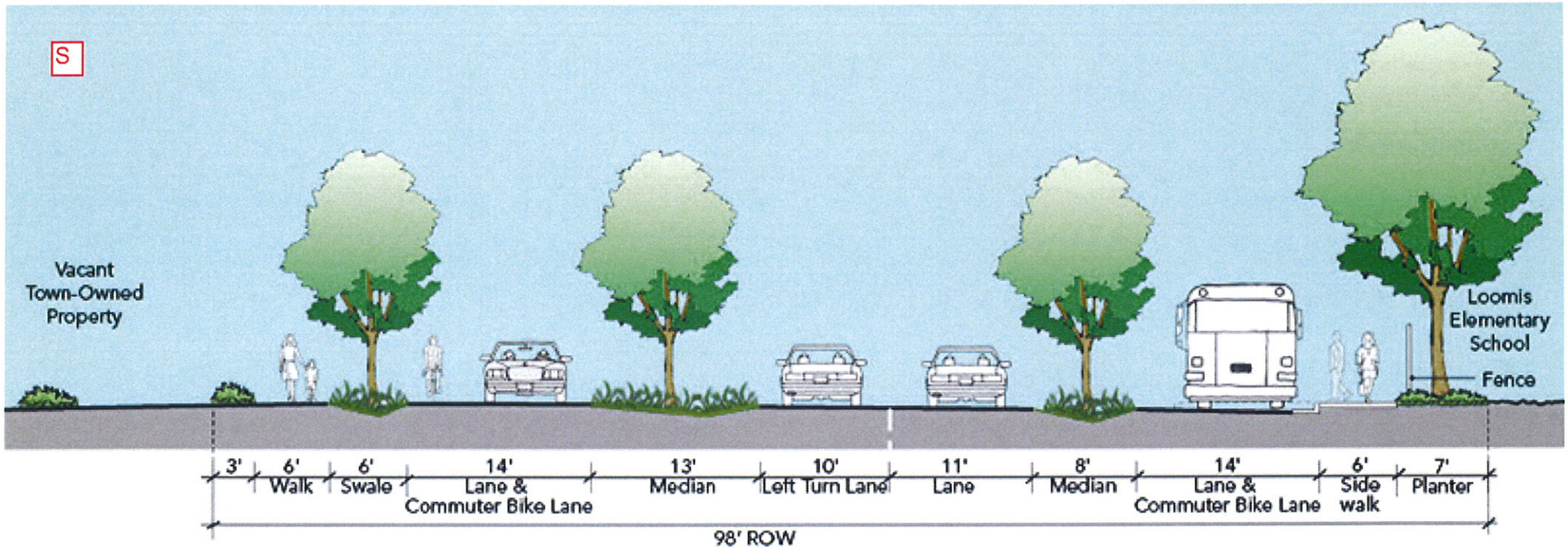
S
Vacant
Town-Owned
Property
Loomis
Elementary
School
Fence
3'
6'
Walk
6'
Swale
14'
Lane &
Commuter Bike Lane
13'
Median
10'
Left Turn Lane
11'
Lane
8'
Median
14'
Lane &
Commuter Bike Lane
6'
Side
walk
7'
Planter
98' ROW

LOOMIS - TOWN CENTER
IMPLEMENTATION PROGRAM PHASE 1

EXHIBIT 6
SECTION T - HORSESHOE BAR ROAD

KEY MAP

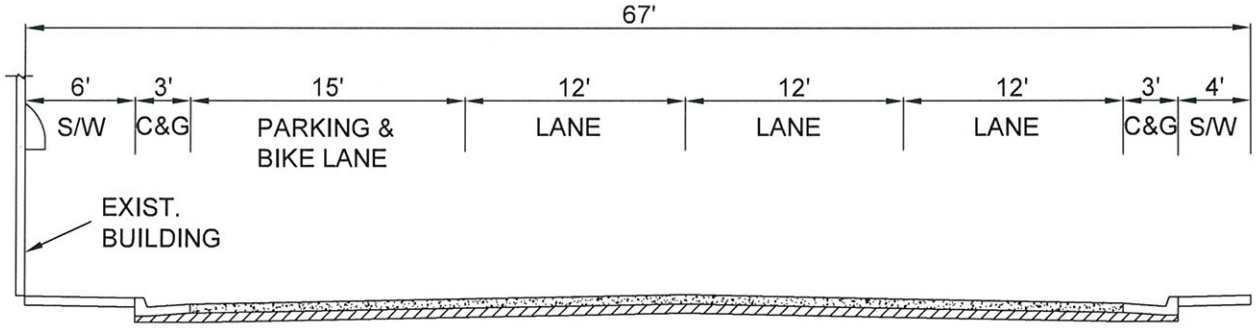

SCALE: 1"= 10'

1

2

3

10 0 5 10

TLA

File: K:\1proj\14XX\1448\Dwg\Exhibits\EXH-6T_XSEC.dwg Jun 25, 2009 - 12:09pm jhenderson

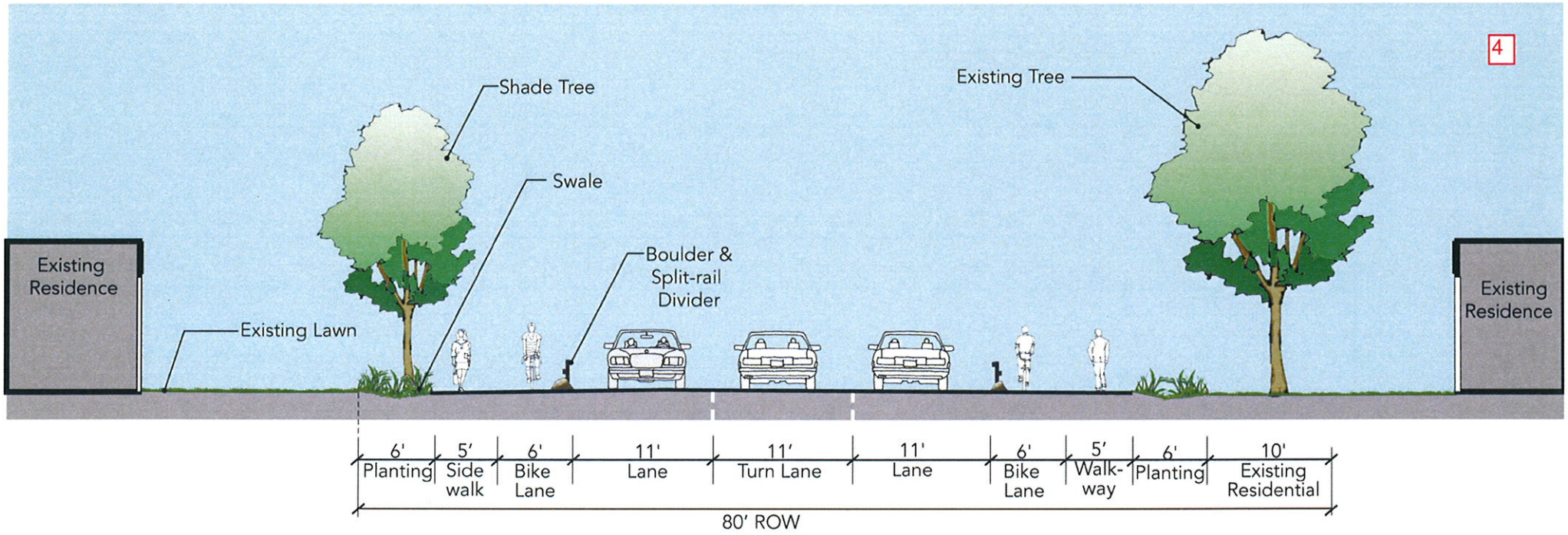
4
Shade Tree
Swale
Existing Tree
Boulder &
Split-rail
Divider
Existing
Residence
Existing Lawn
Existing
Residence
6'
Planting
5'
Side
walk
6'
Bike
Lane
11'
Lane
11'
Turn Lane
11'
Lane
6'
Bike
Lane
5'
Walk-
way
6'
Planting
10'
Existing
Residential
80' ROW

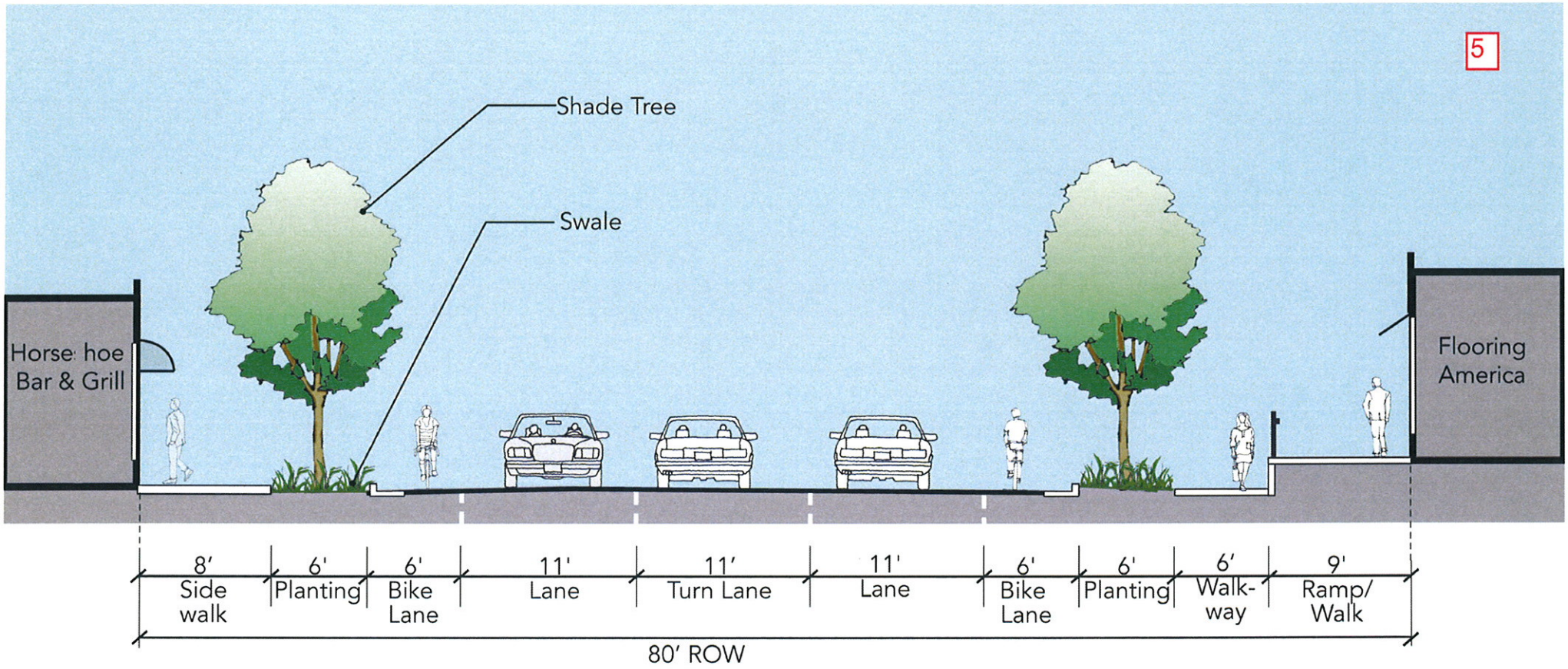
5
Shade Tree
Swale
Horse hoe Bar & Grill
Flooring America
8′ Side walk
6' Planting
6' Bike Lane
11' Lane
11′ Turn Lane
11' Lane
6' Bike Lane
6' Planting
6′ Walk-way
9' Ramp/ Walk
80′ ROW

LOOMIS - TOWN CENTER
IMPLEMENTATION PROGRAM PHASE 1

EXHIBIT 6
SECTION V - HORSESHOE BAR ROAD

KEY MAP

SCALE: 1"= 10'

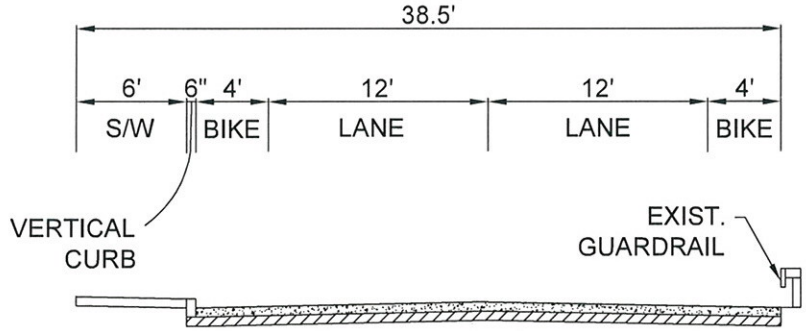

1

2

3

10 0 5 10

TLA

File: K:\1proj\14XX\1448\Dwg\Exhibits\EXH-6V_XSEC.dwg Jun 25, 2009 – 12:20pm jhenderson

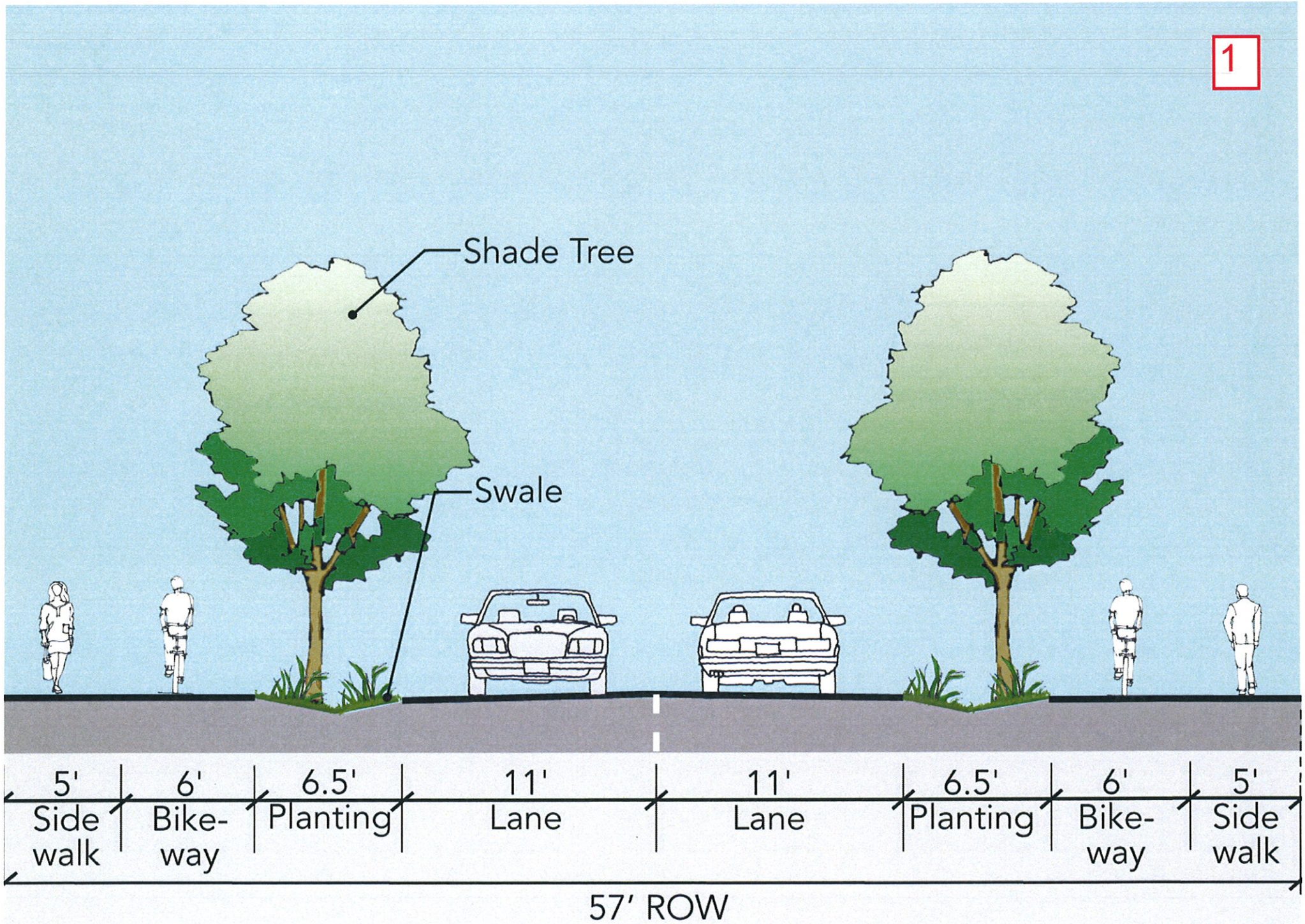
1
Shade Tree
Swale
5'
Side
walk
6'
Bike-
way
6.5'
Planting
11'
Lane
11'
Lane
6.5'
Planting
6'
Bike-
way
5'
Side
walk
57' ROW

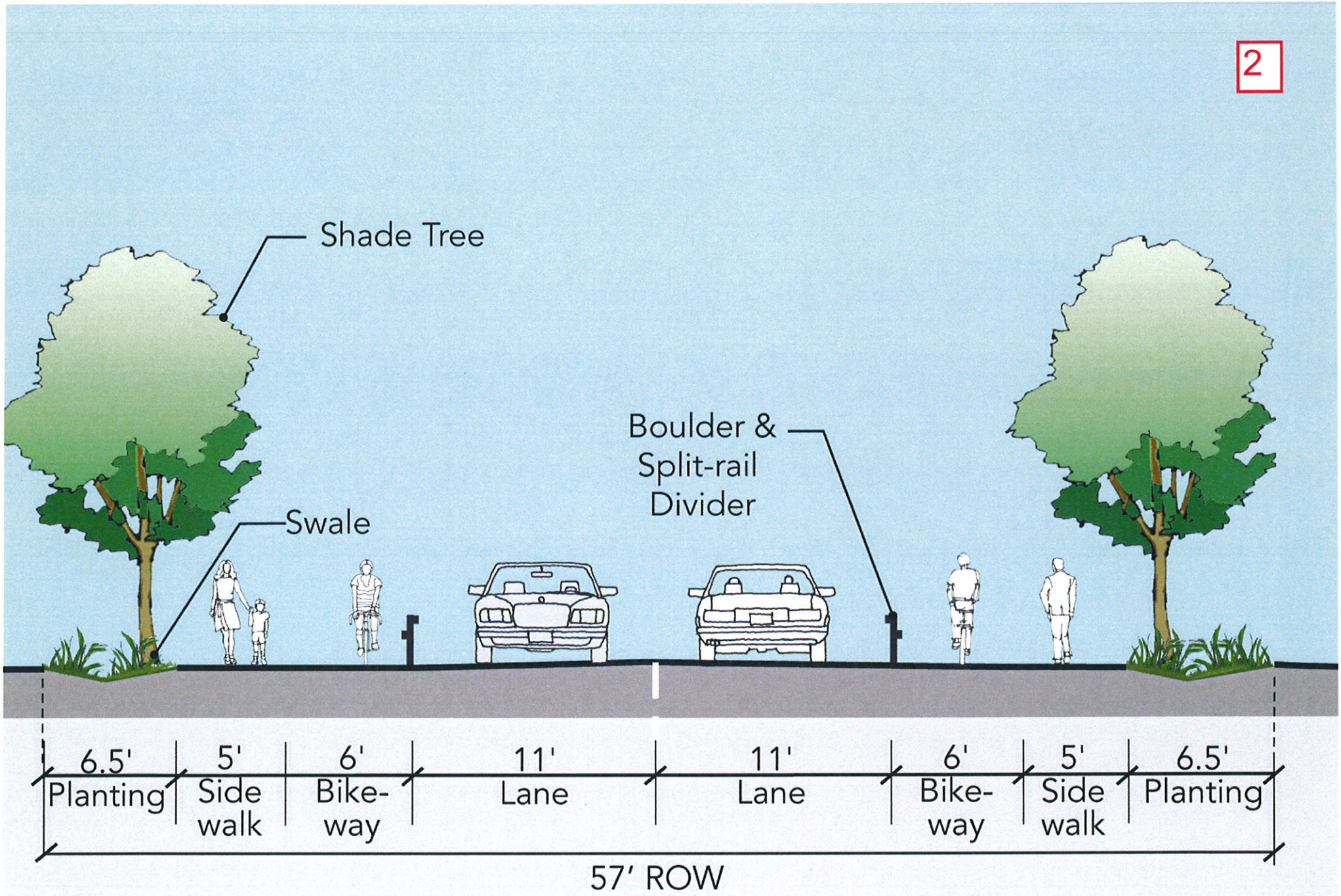
2
Shade Tree
Swale
Boulder &
Split-rail
Divider
6.5'
Planting
5'
Side
walk
6'
Bike-
way
11'
Lane
11'
Lane
6'
Bike-
way
5'
Side
walk
6.5'
Planting
57' ROW

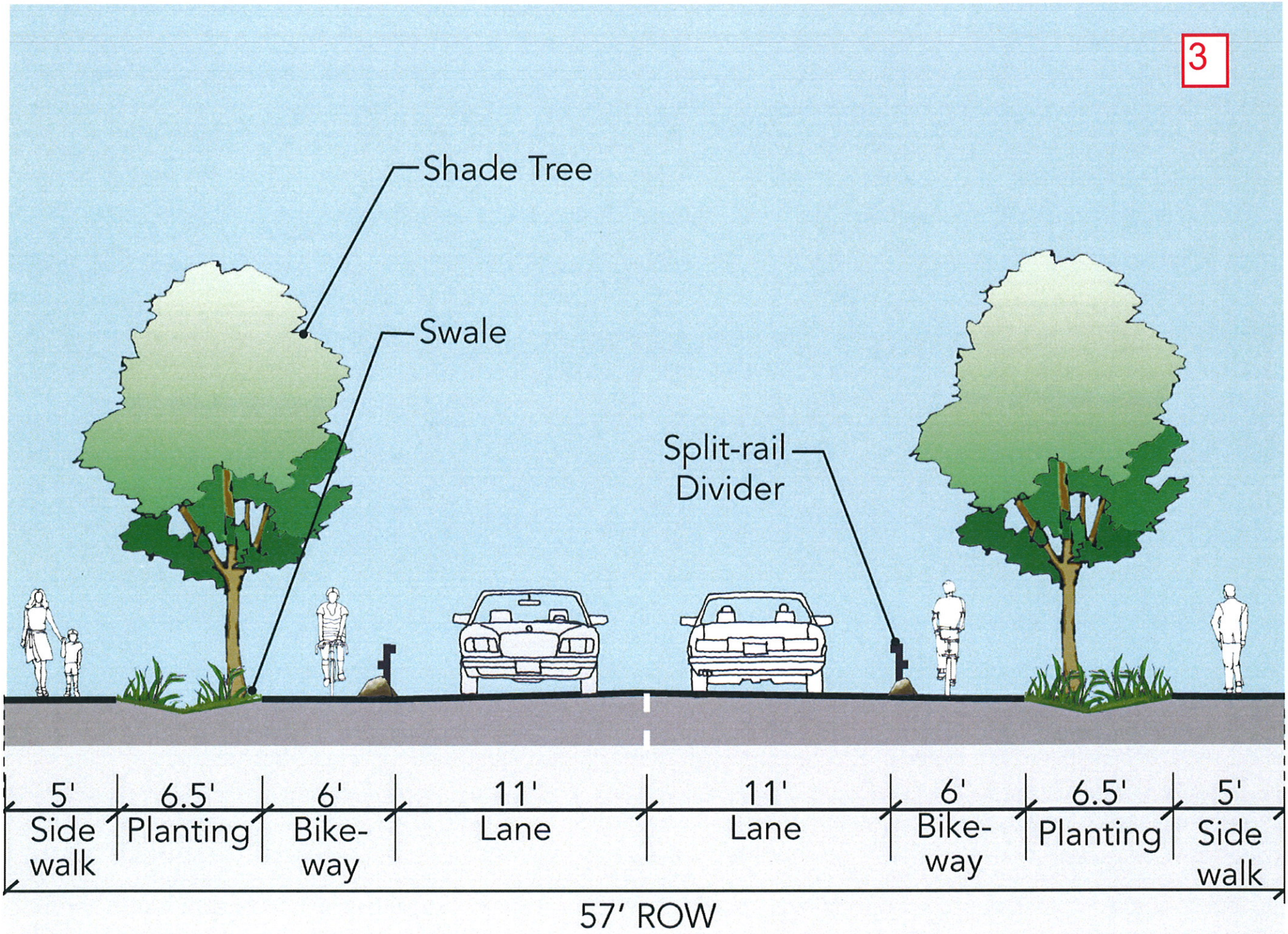
3
Shade Tree
Swale
Split-rail Divider
5' Side walk
6.5' Planting
6' Bike-way
11' Lane
11' Lane
6' Bike-way
6.5' Planting
5' Side walk
57' ROW